US006129308A

United States Patent [19]

Nastasi et al.

[11] **Patent Number: 6,129,308**

[45] **Date of Patent: Oct. 10, 2000**

[54] **DELTA-SHAPED AIRCRAFT WITH VARIABLE CAMBER FUSELAGE AND WING**

[75] Inventors: **Richard F. Nastasi**, Commack; **Walter S. Soeder**, Patchogue, both of N.Y.

[73] Assignee: **Northrop Grumman Corporation**, Los Angeles, Calif.

[21] Appl. No.: **09/157,745**

[22] Filed: **Sep. 21, 1998**

[51] **Int. Cl.**[7] **B64C 1/00**

[52] **U.S. Cl.** **244/36**; 244/219; 244/201

[58] **Field of Search** ..... 244/36, 219, 39, 244/201, 45 R, 216

[56] **References Cited**

U.S. PATENT DOCUMENTS

1,325,377	12/1919	Richards .	
2,142,997	1/1939	Case	244/121
2,376,780	5/1945	Kenyon	244/87
2,735,701	2/1956	Horton	244/36
2,736,523	2/1956	Chaplin	244/140
2,778,586	1/1957	Nyerges et al.	244/120
2,872,137	2/1959	Gluhareff	244/120
3,047,255	7/1962	Wallis	244/55
3,064,928	11/1962	Toll	244/46
3,114,525	12/1963	Morgan et al.	244/120
3,155,344	11/1964	Vogt	244/46
3,171,620	3/1965	Walley et al.	244/120
3,288,400	11/1966	Nazir	244/43
3,433,439	3/1969	Brame et al.	244/120
3,447,761	6/1969	Whitener et al.	244/15
3,698,668	10/1972	Cole	244/44
3,776,489	12/1973	Wen et al.	244/1 N
3,955,781	5/1976	Tupolev et al.	244/13
4,008,867	2/1977	Kaniut	244/87
4,053,124	10/1977	Cole	244/219
4,113,210	9/1978	Pierce	244/219
4,194,708	3/1980	Tracy et al.	244/15
4,351,502	9/1982	Statkus	244/219
4,483,497	11/1984	Rethorst	244/15
4,735,381	4/1988	Wood	244/130
5,082,204	1/1992	Croston	244/36
5,222,699	6/1993	Albach et al.	244/219
5,322,242	6/1994	Tracy	244/36
5,518,204	5/1996	Tracy	244/36
5,538,201	7/1996	Gerhardt	244/204
5,813,628	9/1998	Hahl	244/36
5,897,076	4/1999	Tracy	244/36

FOREIGN PATENT DOCUMENTS

WO 9411248	5/1994	WIPO	244/55

Primary Examiner—J. Woodrow Eldred

Attorney, Agent, or Firm—Terry J. Anderson; Karl J. Hoch, Jr.

[57] **ABSTRACT**

In accordance with the present invention, there is provided a variable camber delta-shaped aircraft. The aircraft is provided with an integrated fuselage/wing generally defining the aircraft and having longitudinal and lateral axes. The fuselage/wing has a forward section which is rotably attached to an aft section about the lateral axis. The aircraft is further provided with an aerodynamic lifting surface which is disposed about the fuselage/wing and defined by a camber. The forward section has a downwardly deflected position when rotated relative to the aft section. The forward and aft sections are cooperatively formed to increase the camber of the lifting surface when the forward section is in the deflected position.

11 Claims, 2 Drawing Sheets

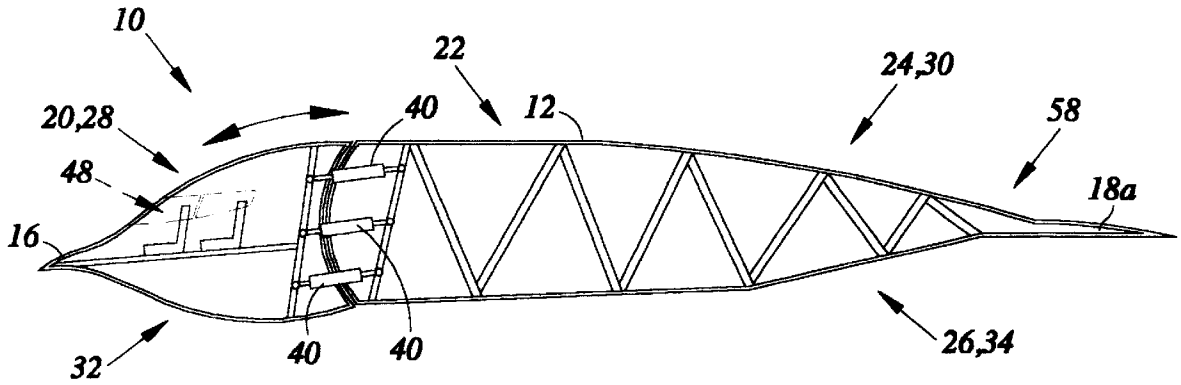

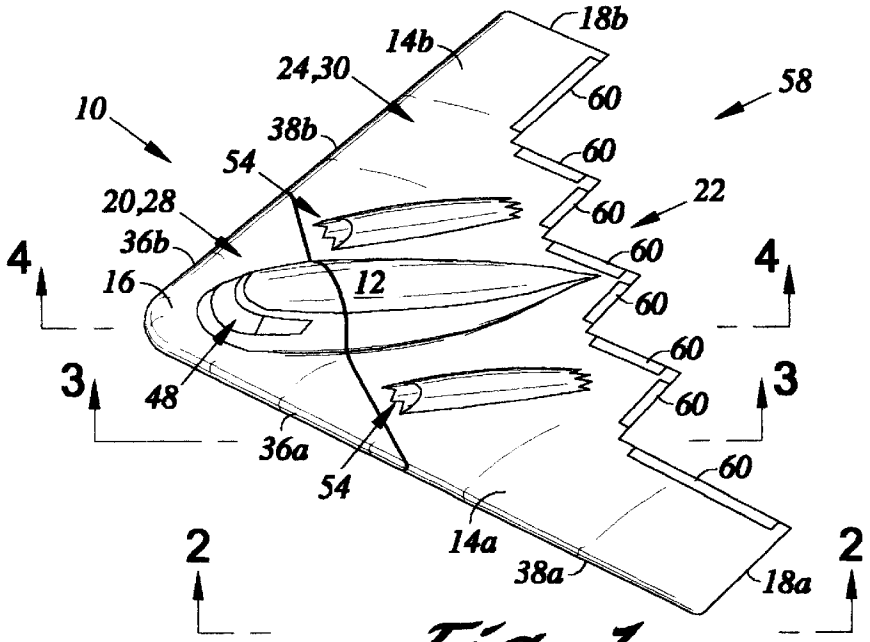

Fig. 1

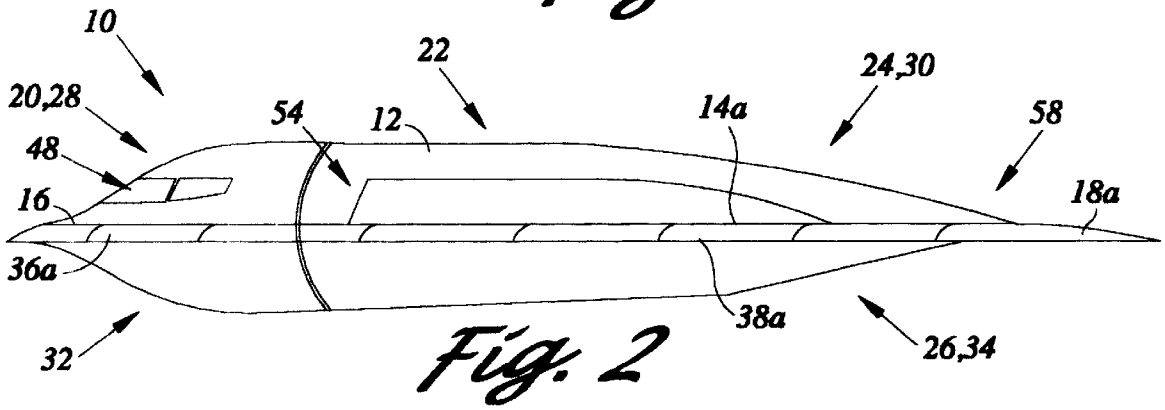

Fig. 2

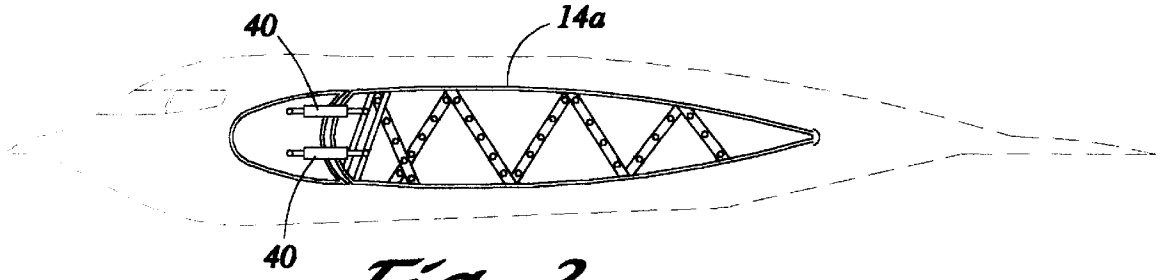

Fig. 3

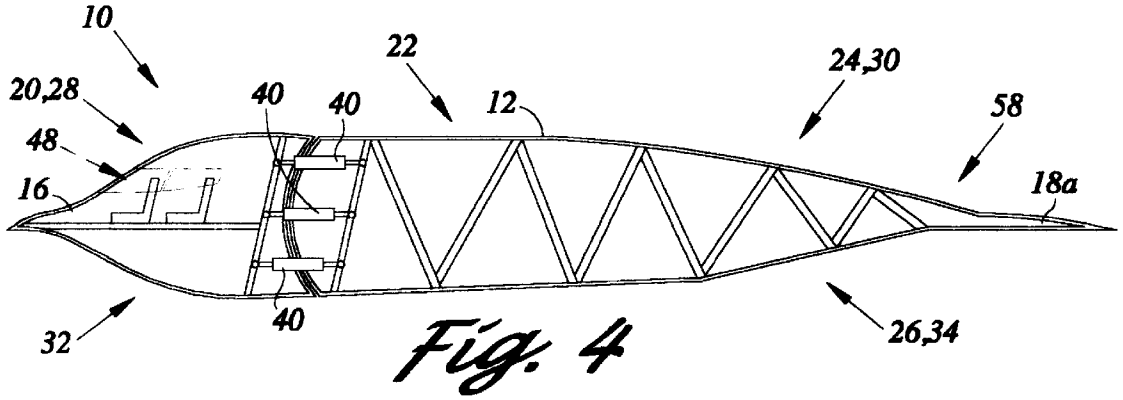

Fig. 4

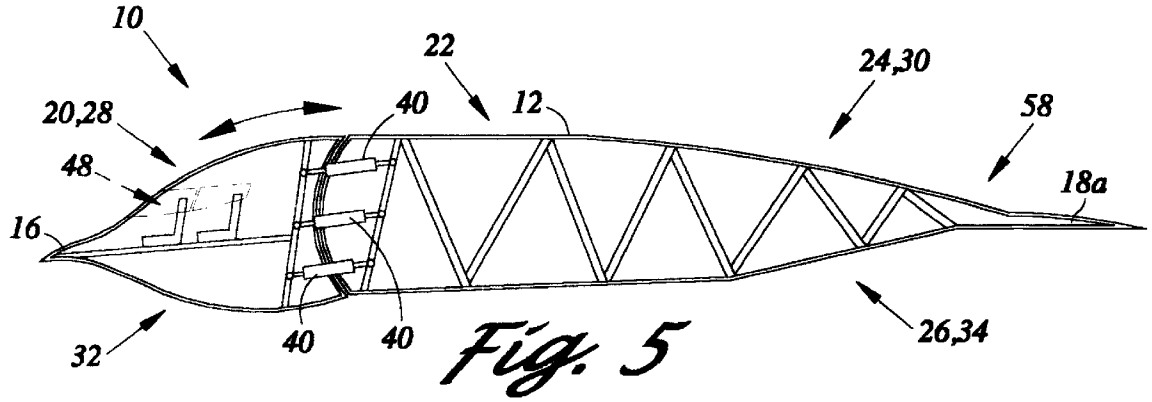

Fig. 5

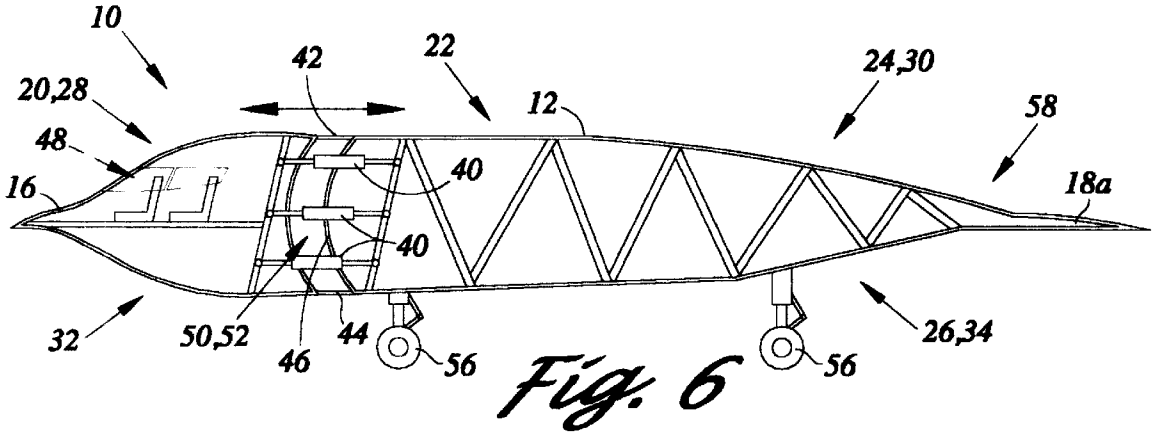

Fig. 6

DELTA-SHAPED AIRCRAFT WITH VARIABLE CAMBER FUSELAGE AND WING

FIELD OF THE INVENTION

The present invention relates generally to air vehicles, and more particularly to a delta-shaped aircraft having an integrated wing and fuselage configuration which is deflectable for changing the camber of the aerodynamic lifting surface of the aircraft.

BACKGROUND OF THE INVENTION

Delta-shaped aircraft are characterized by highly swept-back wings and a relatively low aspect ratio which results in a generally triangular planform. While conventionally shaped aircraft are defined by a central fuselage with laterally protruding wings, delta-shaped aircraft have an integrated fuselage and wing configuration. In this respect, typically the modern "stealthy" type of delta-shaped aircraft have an aerodynamic lifting surface which is defined by a central fuselage which smoothly blends with highly swept-back wings. In fact, because of this smooth integration, these aircraft are contemplated as having only a single wing and these aircraft are sometimes referred as being a "flying wing." Some present examples of delta-shaped aircraft include the U.S. military's B-2 bomber and the F-117 stealth fighter.

Due to the increased aerodynamic lifting surface area of these aircraft in comparison to conventional aircraft, delta-shaped aircraft are aerodynamically highly efficient. In addition, these aircraft are designed to have relatively long straight leading edges, albeit swept-back, when viewed topwise or bottomwise. The surface contours, however, are specifically formed to follow smooth continuous curves and having no or few acute angulations, especially right angles. Such surface contouring is contemplated to result in a relatively low overall aircraft radar signature, and thus making delta-shaped aircraft "stealthy."

As one of ordinary skill in the art will appreciate, aircraft must reduce their speed when performing landing operations. To perform this function, conventional aircraft typically employ flaps which are ratably attached to the trailing edges of the wings. The flaps are deflected downward, and in some configurations the flaps are also extended aftward, in order to produce drag, thereby slowing down the aircraft to required landing flight speeds.

Modern stealthy delta-aircraft, however, do not have traditional flaps at the trailing edges of the wings. For example, in the case of the B-2 stealth bomber, the aircraft does not even have downwardly deflectable or aftward extendable flaps for producing drag and slowing the aircraft. These aircraft typically have angled elevons and rudders for their control surfaces which are mounted to the trailing edge of the wing. Among other design constraints, this is due to radar signature mitigation reasons. As such, in addition to reducing engine power, these aircraft reduce their speed for landing operations by approaching the landing area at a relatively high angle-of-attack or nose-up in order to increase drag.

Operating an aircraft at a high angle-of-attack has several implications. Increasing the angle-of-attack with respect to the forward direction of flight tends to increase the lift. Regardless of any increase in the lift due to angle-of-attack effects, as the speed of the aircraft is decreased, at some point additional lift may be required to maintain the desired altitude and possibly prevent a stall condition. As such, several sets of control surfaces called elevons are disposed

at the trailing edges of the delta wing. Elevons are angularly disposed with respect to the longitudinal axis or centerline of the fuselage within the horizontal plane. The elevons function much the same as ailerons and elevators for respectively turning and pitching conventional aircraft. Reliance upon the use of elevons or other aerodynamic control surfaces, however, undesirably increases the radar observable signature of the aircraft. Further, use of such aerodynamic control surfaces may necessitate the use of auxiliary control surfaces, such as trim tabs which further tend to increase radar signature.

In addition to increasing the aircraft radar signature and reliance upon control surfaces, operating the aircraft at a high angle-of-attack results in the pilot having poor over the nose visibility or at least obstructed visibility in the forward direction. This is due to the projecting nose of the fuselage obstructing the pilot's forward view and/or downward view of the landing surface. As one of ordinary skill in the art can appreciate, pilot visibility is of an utmost safety concern. For example, nighttime landing operations aboard an aircraft carrier are a potential dangerous undertaking and decreased pilot visibility greatly increases the risk of harm.

As such, based upon the foregoing, there exists a need in the art for an improved method and device, for use with delta-shaped aircraft, which mitigates the aircraft radar signature, reduces the reliance upon control surfaces, and improves aerodynamic lift and pilot visibility in comparison to the prior art.

SUMMARY OF THE INVENTION

In accordance with the present invention, there is provided a variable camber delta-shaped aircraft. The aircraft is provided with an integrated fuselage/wing generally defining the aircraft and having longitudinal and lateral axes. The fuselage/wing has a forward section which is rotably attached to an aft section about the lateral axis. The aircraft is further provided with an aerodynamic lifting surface which is disposed about the fuselage/wing and defined by a camber. The forward section has a downwardly deflected position when rotated relative to the aft section. The forward and aft sections are cooperatively formed to increase the camber of the lifting surface when the forward section is in the deflected position. Movement of the forward section is accomplished via the provision of an actuator device which mechanically couples the forward and aft sections for moving the forward section relative to the aft section.

In the preferred embodiment of the present invention, the fuselage/wing has a flexible external skin which is interposed between the forward and aft sections. In this respect the flexible external skin sealably engages the forward and aft sections and defines the aerodynamic lifting surface thereat.

In addition, the forward section has an extended position which is translated along the longitudinal axis away from the aft section. Such extended position facilitates the formation of an airflow channel interposed between the forward and aft sections when the forward section is in the extended position for allowing airflow therethrough. Such airflow is contemplated to alter the aerodynamic characteristics of the lifting surface. Further, when the forward section is in the extended position is contemplated that an access channel may be formed between the forward and aft sections for allowing access to the cockpit therethrough. The cockpit may be disposed either within the forward or aft sections.

The variable camber delta-shaped aircraft constructed in accordance with the present invention presents numerous

advantages not found in related prior art systems. In this respect, the present system is constructed so as to increase aerodynamic lift while the aircraft is flow at a relatively high angle-of-attack. In practice, the delta-shaped aircraft may be required to operate in high angle-of-attack envelopes, in order to slow the aircraft for landing for example. By rotating the forward section of the fuselage/wing, the camber of the aerodynamic lifting surfacing is increased. Such cambering increases the lift while the aircraft slows and therefore extends the flight envelope to prevent a stall condition. Moreover, because the increased camber results in increased lift, reliance on and usage of control surfaces to gain lift are reduced. In this respect, the radar signatures associated with actuation of such control surfaces are also reduces.

Importantly, rotating the forward section into its downwardly deflected position increases the pilot's over the nose visibility when the aircraft is flow at a high angle-of-attack. In the case where the cockpit is located within the rotating forward section, the downward visibility is increased as the forward section is deflected. Where the cockpit is located within the aft section, the forward section acts as a visual obstruction which is mitigated as the forward section articulates downward.

As such, the present invention represents an advance in the art.

BRIEF DESCRIPTION OF THE DRAWINGS

These, as well as other features of the present invention, will become more apparent upon reference to the drawings wherein:

FIG. **1** is a perspective view of the delta-shaped aircraft of the present invention;

FIG. **2** is a side view of the delta-shaped aircraft of FIG. **1**;

FIG. **3** is a symbolic cross-sectional view of the aircraft of FIG. **1** as seen along axis **3**—**3**; and

FIG. **4** is a symbolic cross-sectional view of the aircraft of FIG. **1** as seen along axis **4**—**4**;

FIG. **5** is a symbolic cross-sectional view of the aircraft of FIG. **4** with the forward section in a deflected position; and

FIG. **6** is a symbolic cross-sectional view of the aircraft of FIG. **4** with the forward section in an extended position.

DETAILED DESCRIPTION OF THE PREFERRED EMBODIMENT

Referring now to the drawings wherein the showings are for purposes of illustrating a preferred embodiment of the present invention only, and not for purposes of limiting the same, FIGS. **1**–**6** illustrate a delta-shaped aircraft **10** which is constructed in accordance with the present invention have a variable camber fuselage and wing.

In accordance with the present invention, there is provided a variable camber delta-shaped aircraft **10**. The aircraft **10** has a longitudinal axis and is provided with a central fuselage **12** therealong. A pair of opposing swept-back wings **14***a*, **14***b* extend laterally and in an aftward direction from the fuselage **12**. The wings **14***a*, **14***b* have an outer contour which blends smoothly and continuously with that of the fuselage **12**. In this respect the fuselage **12** is completely integrated with the wings **14***a*, **14***b*. As one of ordinary skill in the art will appreciate such smooth integration is contemplated to give the entire aircraft **10** the appearance and functionality of being a single wing. Thus, the integrated fuselage/wing configuration generally defines the aircraft **10**. As such, the aircraft **10** may be characterized by having a relatively low aspect ratio which results in a generally triangular or delta-shaped planform. Some present examples of aircraft having fuselage/wing configuration suitable for use in the present invention include the U.S. military's B-2 bomber and the F-117 stealth fighter and those which are chosen from those well known to one ordinary skill in the art. The fuselage **12** is provided with a nose **16**. The wings **14***a*, **14***b* are respectively have a wing tips **18***a*, **18***b*. The wings **14***a*, **14***b* extend in an aftward direction from the nose **16** and terminate at the wing tips **18***a*, **18***b* thereof. It is contemplated that the wings **14***a*, **14***b* may originate at the nose **16** or at some point aftward along the longitudinal axis from the central fuselage **12**.

The aircraft **10** is provided with a forward section **20** which is rotably mounted to an aft section **22** about a lateral axis which is orthogonal to the longitudinal axis. While the lateral axis is symbolically depicted to be fixed with respect to the forward and aft sections **20**, **22** it is contemplated that the lateral axis may itself translate.

The aircraft **10** is generally provided with an upper and lower surfaces **24**, **26**. The upper surface **24** has forward and aft portions **28**, **30** respectively associated with the forward section **20** of the aircraft **10**. Similarly, the lower surface **24** has forward and aft portions **32**, **34** respectively associated with the aft section **22** of the aircraft **10**. Thus, the upper surface **24** is contemplated to encompass both the fuselage **12** and the wings **14***a*, **14***b*. In addition, the wings **14***a*, **14***b* respectively have inboard leading edges **36***a*, **36***b* respectively associated with the forward section **20** of the aircraft **10**. The wings **14***a*, **14***b* further respectively have outboard leading edges **38***a*, **38***b* respectively associated with the aft section **22** of the aircraft **10**. The inboard leading edges **36***a*, **36***b* are preferably sized and configured to be in alignment with the outboard leading edges **38***a*, **38***b* so as to form a smooth continuous straight contour thereat. It is contemplated that such a straight contour is especially desirable in light of radar signature mitigation considerations.

Importantly, the leading edges **36***a*, **36***b*, **38***a*, **38***b* of the wings **14***a*, **14***b* and the upper surface **24** of the aircraft **10** generally define the aerodynamic lifting surface of the aircraft **10**. As such, the aerodynamic lifting surface is disposed about the fuselage **12** and the wings **14***a*, **14***b*. The aerodynamic lifting surface is defined by a camber. Such camber is defined by the arced curvature of the upper surface **24** of the aircraft **10** which smoothly blends with the contour of the leading edges **36***a*, **36***b*, **38***a*, **38***b*. As one skilled in the art will recognize, the camber is intimately associated with the aerodynamic performance of the lifting surface of the aircraft **10**.

As mentioned above, the forward section **20** rotably mounted to the aft section **22**. In this regard, the forward section **20** has a downwardly deflected position when rotated relative to the aft section **22**. The forward section **20** is contemplated to have a normal position in which such member is undeflected. The forward and aft sections **20**, **22** are cooperatively formed to increase the camber of the lifting surface when the forward section **20** is rotated or deflected downward relative to the aft section **22**. The forward section **20** is contemplated to facilitate a maximum cambering of the aerodynamic lifting surface of the aircraft **10** when it is in its deflected position. The camber of the lifting surface may be incrementally or variably increased as the forward section **20** is rotated through intermediated positions from its normal position to the deflected position. As one of ordinary skill in the art will appreciate the camber is measured relative to the direction of flight of the aircraft **10**, and of particular interest is the angle-of-attack.

Movement of the forward section **20** is accomplished via the provision of an actuator device **42** which mechanically couples the forward and aft sections **20, 22** for rotating the forward section **20** relative to the aft section **22**. The actuator device **42** is symbolically depicted in FIGS. **3–6**. The actuator device **42** may be hydraulic, pneumatic or electromechanical in nature. It is contemplated that the sizing and configuration of the actuator device **42** and supporting linkages are chosen from those well known to one of ordinary skill in the art. U.S. Pat. No. 2,872,137 to Gluhareff, U.S. Pat. No. 2,736,523 to Chaplin, U.S. Pat. No. 3,114,525 to Morgan et al. and U.S. Pat. No. 3,171,620 to Walley et al. disclose actuator devices and supporting linkages which in concept may be incorporated into the aircraft **10** (such prior art patents are incorporated herein by reference). While these prior art patents are limited to disclosure of sectionally rotatable fuselages of aircraft, and not the wings thereof, these prior patents do describe actuation mechanisms which may be instructive to one of ordinary skill in the art with regard to the actuator device **42** of the aircraft **10** of the present invention.

In the preferred embodiment of the present invention, while the forward section **20** is in its normal or deflected positions, the forward and aft sections **20, 22** are in flush or substantially sealed engagement therewith. In this respect, the surface contour of forward and aft portions **28, 30** of the upper surface **24** is formed to smoothly transition from the forward section **20** to the aft section **22**. In the preferred embodiment of the present invention, interposed between the forward and aft sections **20, 22** adjacent the upper surface **24** is an upper transition skin **42**. The upper transition skin **42** is formed of a flexible polymeric material which spans the gap between the forward and aft sections **20, 22**. The upper transition skin **42** is contemplated to facilitate a sealed smooth surface contour transition from the forward section **20** to the aft section **22**, in particular, from the forward portion **28** to the aft portion **30** of the upper surface **24**. The upper transition skin **42** is formed of a flexible material such that it stretches or elongates upon rotation of the forward section **20** into its deflected position. The method of attachment of the upper transition section **42** to the forward and aft sections **20, 22** and well as other material selections may be chosen from those well known to one of ordinary skill in the art. In a similar fashion, a lower transition skin **44** may be interposed between the forward and aft sections **20, 22** adjacent the lower surface **26**. It is contemplated that the upper and lower transition skin may be formed of a single member so as to generally form a gasket or seal between the forward and aft sections **20, 22**.

In an alternate embodiment of the present invention, where the upper transition skin **44** is not included, the aft section **22** may be provided with a curved frontal surface **46**. When the forward section **20** is in its normal position, the curved frontal surface **46** is completely disposed between the forward and aft sections **20, 22**. As the forward section is rotated from its normal position, the frontal surface **46** is gradually exposed and defines both the upper surface **24** of the aircraft **10** and the aerodynamic lifting surface thereat.

It is contemplated that the aircraft **10** is provided with a cockpit **48**. Although the cockpit **48** is depicted to be located within the forward section **20**, is may be located within the aft section **22**. Advantageously, the forward section **20** may be provided with an extended position which is translated along the longitudinal axis away from the aft section **22**. When the forward section **20** is in the extended position, an access channel **50** is formed between the forward and aft sections **20, 22** for allowing access to the cockpit **48** therethrough. It is also contemplated that the access channel **50** may provide access to equipment which is interior to the aircraft **10**, such as the engines. In addition, the forward section **20** may be selectively extended so as to form an airflow channel **52** between the forward and aft sections **20, 22** for allowing airflow to pass therethrough. Such airflow is contemplated to pass from the lower surface **26** to the upper surface **24** for altering the aerodynamic characteristics of the lifting surface thereat.

In addition, the aircraft **10** may be provided with engine air intakes **54**. Although the air intakes **54** are depicted as being located within the aft section **22**, the air intakes **54** may be located within the forward section **20**. Further, the aircraft **10** may be provided with landing gear **56**. Although the landing gear **56** is depicted as being located at the aft section **22**, the landing gear **56** or at least a portion thereof may be located at the forward section **20** as well.

The wings **14***a*, **14***b* are provided with trailing edges **58** with control surfaces **60** disposed thereat. In the case of a B-2 type of delta-shaped aircraft, the control surfaces **60** may take the form of elevons and rudders. The control surfaces **60** may also take the form of ailerons, elevators, trim tabs and those which are well known to one of ordinary skill in the art.

In operation, when flying the aircraft **10** horizontally with respect to the direction of flight (i.e., no angle-of-attack), the forward section **20** would be in its normal position. The forward section **20** may be rotated toward its deflected position to increase aerodynamic lift. The downward deflectability of the forward section **20** is most appreciated, however, when the aircraft must operate at a high angle-of-attack, such as during landing operations. As one of ordinary skill in the art will appreciate, when the aircraft **10** is flown at a high angle-of-attack, the aircraft speed is reduced. The pilot on landing approach will adjust the control surfaces **60** so as to pitch the nose **16** of the aircraft **10**. In order to maintain a desired altitude or to prevent a stall condition, however, an increase in aerodynamic lift may be desired. As such, the forward section **20** may be selectively rotated downward toward the deflected position with a corresponding increase in aerodynamic lift. This is due to the increase in camber of the aerodynamic lifting surface as the forward section **20** is rotated.

In addition, as the aircraft **10** approaches the landing surface at a high angle-of-attack, the over-the-nose pilot visibility is reduced. By articulating or rotating the forward section **20** visibility is increased. In particular, where the cockpit **48** is disposed within the forward section **20** of the aircraft **10**, rotation of the forward section **10** inherently rotates the pilot's visual viewing are downward and thus increases downward or over-the-nose visibility. There the cockpit **48** is disposed within the aft section **22** of the aircraft **10**, the forward section **20** represents a visual obstacle or boundary for the pilot. Rotation of the forward section **20**, however, tends to expand the pilot's downward or over-the-nose view, and thus increases pilot visibility.

Additional modifications and improvements of the present invention may also be apparent to those of ordinary skill in the art. Thus, the particular combination of parts described and illustrated herein is intended to represent only one embodiment of the present invention, and is not intended to serve as limitations of alternative devices within the spirit and scope of the invention.

What is claimed is:

1. A variable camber delta-shaped aircraft comprising:

an integrated fuselage/wing generally defining the aircraft and having longitudinal and lateral axes, the fuselage/

wing having a forward section rotably attached to an aft section about the lateral axis; and

an aerodynamic lifting surface disposed about the fuselage/wing and defined by a camber;

wherein the forward section having a downwardly deflected position when rotated relative to the aft section, the forward and aft sections being cooperatively formed to increase the camber of the lifting surface when the forward section is in the deflected position.

2. The delta-shaped aircraft of claim **1** wherein the aerodynamic lifting surface having a pair of swept back leading edges, the leading edges having a pair of inboard portions and a pair of outboard portions, the inboard portions being interposed between the longitudinal axis and the outboard portions, the inboard portions being disposed on the forward section of the fuselage/wing, the outboard portions being disposed on the aft section of the fuselage/wing.

3. The delta-shaped aircraft of claim **1** wherein the fuselage/wing further having an actuator device mechanically coupling the forward and aft sections for moving the forward section relative to the aft section.

4. The delta-shaped aircraft of claim **3** wherein the actuator device is a hydraulic device.

5. The delta-shaped aircraft of claim **1** wherein the fuselage/wing having a flexible external skin interposed between the forward and aft sections and defining the aerodynamic lifting surface thereat.

6. The delta-shaped aircraft of claim **1** wherein the forward section having an undeflected position with respect to the aft section, the forward and aft sections being in substantially sealed engagement therebetween when the forward second is in the undeflected position.

7. The delta-shaped aircraft of claim **1** wherein the forward section having an extended position translated along the longitudinal axis away from the aft section, the fuselage/wing having an airflow channel interposed between the forward and aft sections when the forward section is in the extended position for allowing airflow therethrough.

8. The delta-shaped aircraft of claim **1** wherein the forward section having a cockpit adjacent the aft section.

9. The delta-shaped aircraft of claim **8** wherein the forward section having an extended position translated along the longitudinal axis away from the aft section, the fuselage/wing having an access channel interposed between the forward and aft sections when the forward section is in the extended position for allowing access to the cockpit therethrough.

10. The delta-shaped aircraft of claim **1** wherein the aft section having a cockpit disposed adjacent the forward section.

11. The delta-shaped aircraft of claim **10** wherein the forward section having an extended position translated along the longitudinal axis away from the aft section, the fuselage/wing having an access channel interposed between the forward and aft sections when the forward section is in the extended position for allowing access to the cockpit therethrough.

* * * * *